LED Recessed Downlight

RAL40K

Application

Recessed downlight is designed to use for office buildings,shopping centers,convenience stores, modern trade stores,discount stores,hotels, resturants,residences,recreation centers, museums,etc.

Specification

Housing	Die-cast aluminium
Description	Primary reflector : High quality lens 4 different secondary reflectors are available for various applications WR (front reflector white) BR (front reflector black) MB (front reflector mirror black) MI (front reflector mirror chrome)
Finishing	Powder coated in white
Mounting	Recessed
Power	8W
Light Source	LED COB
Colour Temperature	3000/4000/5000K (2700/3500/6500/2700-6000K as optional)
CRI	>90/ >90/ >80
LED Output	992/1071/1160 lm
Luminaire Output	608/650/696 lm *
Beam Angle	20/24/36/50 degree
UGR	<19
Control Gear	Separate Driver
Control	DIM PHASE/0-10V/DALI-2 /DALI-2 DT8 (optional)
Power Supply	220-240VAC,50Hz
Power Factor	>0.9
Insulation Class	II
IP Rating	20
Luminaire Lifetime	50,000 hrs
Remarks	* Value at 50 Degree IP44 is available as option

Ordering Data

Model	Watt
RAL40K/MI/WH-8LED	8W

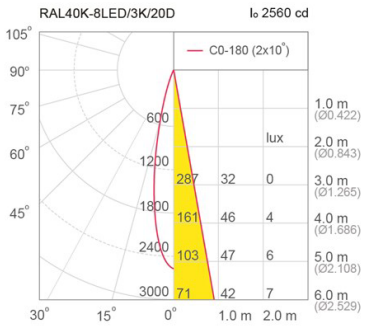



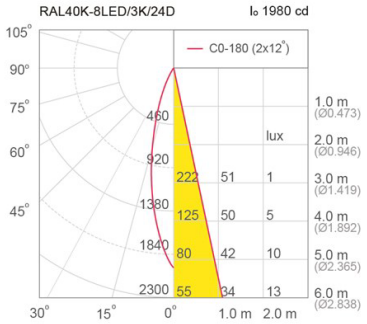

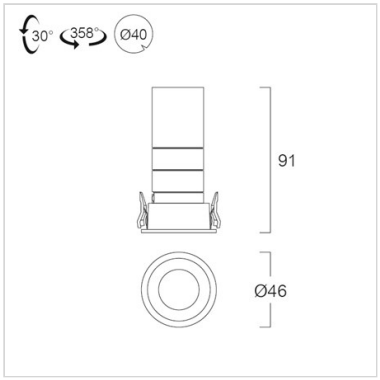

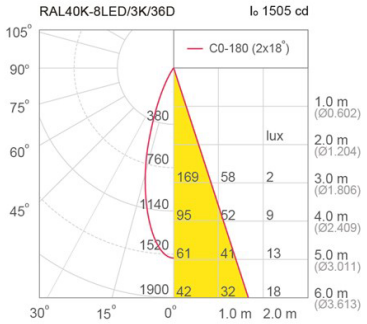

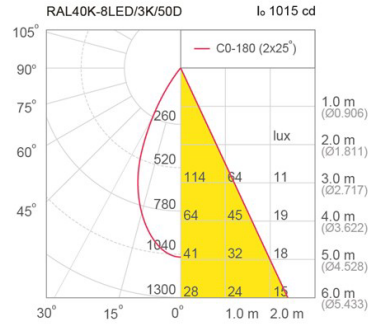

Accessories

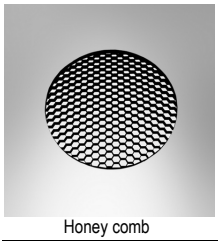

Honey comb